Iurii Tulashvili

Method of training blind students to the construction of graphic images with the application of Autocad 2D

Edukacja - Technika - Informatyka 5/1, 546-550

2014

Iurii TULASHVILI
National University of Water Management and Nature Resources Use, Ukraine

Method of training blind students to the construction of graphic images with the application of Autocad 2D

Aspiring to master profession through higher education obtaining, intensifies among blind youth nowadays. It is stipulated by the fact that the most effective ways of self-realization of sight invalids in the sphere of intellectual activity require a high educational level. Modern computer technologies which are adapted for blind people are created for blind students favorable conditions for education, to promote their competitiveness at the market of intellectual labour.

Actuality of problem of social labour adaptation of sight invalids is determined, above all things, by a place of blind people in a social medium, by that circumstance, that all invalids of sight can participate in the life of society not only as socially competent, but also as creatively active members. The problem of the inclusion of blind people in public life is determined as a problem of social adaptation and integration.

Works in which the peculiarities of personality development process of blind people and its display in the different spheres of vital functions were examined (V. Akimushkin, V. Ermakov, M. Zemcova, A. Litvak, I. Morgulis, E. Sinjeva, A. Suslavichyus, S. Fedorenko and others) became the base aspects for development of the investigated problem. Theoretical principles of our research in the fact that the originality of social situation which is caused by a heavy sensory defect (by blindness) directs development of personality with greater or less determining force and considerably affects the specification of its vital way.

In the process of scientific search, we have discovered that in typhlo--psychological and typhlo-pedagogical literature (V. Akimushkin, M. Zemtsova, V. Ermakov, I. Morgulis and others) many examples of blind people striking achievements in different spheres of professional activity are given. In general, among professions which are prestige for the blind and after which they try to work, are professions which require subsequent studies in professional and higher educational establishments are given in absolute majority.

The aim of the article is to determine the direction of solving current issues shaping ready for use elements of computer graphics in learning of blind people.

According to the results of investigation we ascertained that the world experience of social adaptation of blind people exposes possibilities of wide use of new computer technologies for their professional orientation. Computerization of all directions of human activity allows to say with a confidence that modern

professions such as an operator of computer set, accountant, economist and others, where a computer technique is widely used can be accessible for sight invalids. Appearance of auxiliary technologies, known in the world under the name of "Assistive Technologies" [Hatlen 1997: 80], today considerably help blind people and the persons with a violation of sight to carry out professional studies, create additional access paths to information and on the whole to help them to be integrated to the world of working people and to be the valuable member of society.

Experience of computer technologies application for blind people is acquired in Ukraine today. The purpose of such research in the solving of the problem socialization of blind people with their subsequent professionalization.

The study of features of work abilities forming process at the computer for people with pathology of visual analyzer has a large theoretical and practical value. Finding a new ways in representation of knowledge and development of skills of actions with a computer at violation of sensory sphere enables us to determine conditions and methods of certain group of people studies.

During scientific researching work we've substantiated the didactics conditions of social integration of blind people in modern informative society. We were guided by the following:

- the process of social adaptation of sight invalids to the public relations consists in their obtaining of proper education and qualification which will enable them in subsequent employment according to the selected speciality;
- psychological adaptation of people with sight defects is caused by their individual features and terms of their coexistence in society. Depending on the fact, what conditions and psychological atmosphere are created in the society round blind people, process of their social integration in the conditions of transition to modern informative society will be carried out considerably more fruitfully and more qualitatively.

The analysis of historical development of the science of the blind people proves that development of the system of education requires a permanent study, theoretical comprehension and introduction of pedagogical searches. Scientific consideration of social integration blind people persuades that today an important role in the process of rehabilitation is played by modern educational methods which are built taking into account new scientific and technical achievements of modern informative society.

For personality development of blind people and subsequent professionalization of them an important role is played today by abilities to use the methods of relief draft and skills of subsequent recreation of the built image by computer facilities.

The conducted analysis shows that the special methods of graphic images draft and recreation considerably facilitate educational and labour activity of

people with defects of sight [Синьова 2008: 91]. That's why they must master them and use in the work. Known educational technology for training persons with visual impairments relief drawings based on devices that allow you to create relief dot image.

As a result of the work a technical means for creation relief dot image have developed. In the process of developing its design solved the issue, which consisted of accessibility and convenience to its simplicity and accuracy while ensuring adequate construct of the image. This should facilitate easy absorption techniques and the use of such device will allow you to create shapes with high precision.

A device shows by itself a combination "protractor-ruler" (fig. 1) and allows to build a relief image with satisfactory exactness. The sheet of rubber, which is laid under a paper, is used for a high-quality draft. It is desirable to apply a paper of good quality, which corresponds to ordinary Braille's paper, paper for sketches or half whatman's paper.

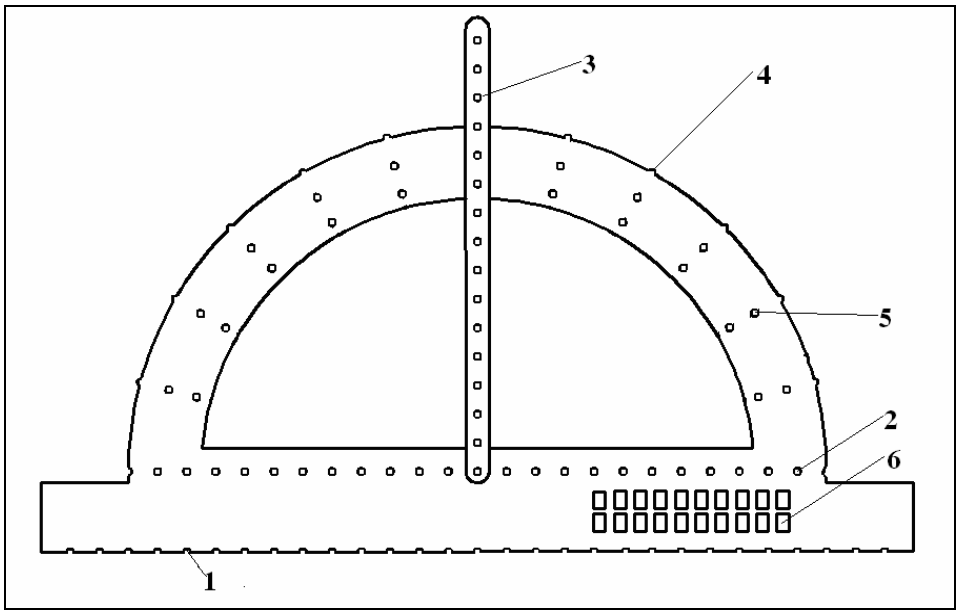

Fig. 1. Image of universal device "protractor-ruler"

1 – Graduated external ruler
2 – Graduated internal ruler
3 – Graduated mobile ruler-pointer
4 – Graduated profile of a protractor
5 – Openings of a protractor exact angular orientation
6 – Cells for writing with Braille type

Relief drawings constructed by “protractor-ruler” can be used as relief version of the previous “rough” image, which later will be converted to normal form by means of computer technologies.

For the construction of graphic image by facilities of computer technologies the method application of graphic interactive package of AutoCAD 2D has been developed. Graphics editor AutoCAD 2D is the most widespread mean of computer graphics, which is used with success both by engineers and designers and architects. AutoCAD 2D is “friendly” in relation to blind as a software product because it is supported the vocal synthesizer Jaws for Windows. It creates preconditions of auxiliary technologies.

The text editor of commands, which is built-in in AutoCAD 2D, provides permanent vocal control after commands which are entered. Principle of construction of graphic image with the use of the system of co-ordinates allows to develop graphic images with high exactness. Using a relief “draft” image, a specialist which has defects of sight can reproduce it with success in electronic kind with a subsequent depicting through an ordinary printer.

Device “protractor-ruler” and methods of its application in the process of construction of relief image with its subsequent transference on facilities of computer graphics was approved on the base of the consultative post of interregional variable night-school at the Volyn regional center of rehabilitation of invalids of sight, at specialized school № 5 of Kyiv and in the universities at the studies of students of sight invalids by the individual educational course by the teachers of department of computer technologies. Verification of the device efficiency for a relief draft “protractor-ruler” and also methods of its application in the process of studies by individual courses “Relief draft” and “Interactive graphic packages” were conducted. Responses of teachers of higher educational establishments (teachers) and students (students of schools) were satisfactory enough. Device revealed to be easy in the use and allowed to carry out the construction of graphic images of necessary exactness. It is very important in the process of transference of graphic relief images on a computer, using the interactive graphic package of AutoCAD 2D.

Thus, we have found that making people with blindness of graphic images by transferring relief reflected in the electronic version by means of computer graphics learning process is defined by its creativity. For people with visual impairments rises task creation algorithm for constructing drawings in graphics AutoCAD 2D.

Educational technology training relief drawings with reproduced images constructed by computer graphics means realized through an integrated approach, which ensured the implementation of interdisciplinary relations. Plan and organizational structure of lesson to the construction of graphic images with the application of AutoCAD 2D are given in the [Тулашвілі 2010: 160].

Conclusions

In the process of research work implementation we proposed the method of realization the technology forming the readiness for the use of elements of computer graphics in the learning process of blind students.

Further study of the use of the device “protractor, ruler”, and method of training blind students to the construction of graphic images with the application of AutoCAD 2D will make success more training for blind people in vocational and higher education institutions.

Literatura

Hatlen H. (1997), *In support of specialized programs for blind and visually impaired children*, The impact of vision loss on learning / H. Hatlen, S. Curry // “Journal of visual impairment and blindness”, vol. 81, nr 1, p. 79–83.

Синьова Є.П. (2008), *Тифлопсихологія*: Підручник / Є.П. Синьова, К.: Знання, 365 с.

Тулашвілі Ю.Й. (2010), *Технологічні аспекти комп’ютерного навчання людей з вадами зору* [монографія] / Ю.Й. Тулашвілі, Луцьк, ВМА «ТЕРЕН», 264 с.

Abstract

The article addresses the issues of developing the skills of graphics processing by blind students using AutoCAD 2D.

Key words: information technology, education of blind, AutoCAD 2D.